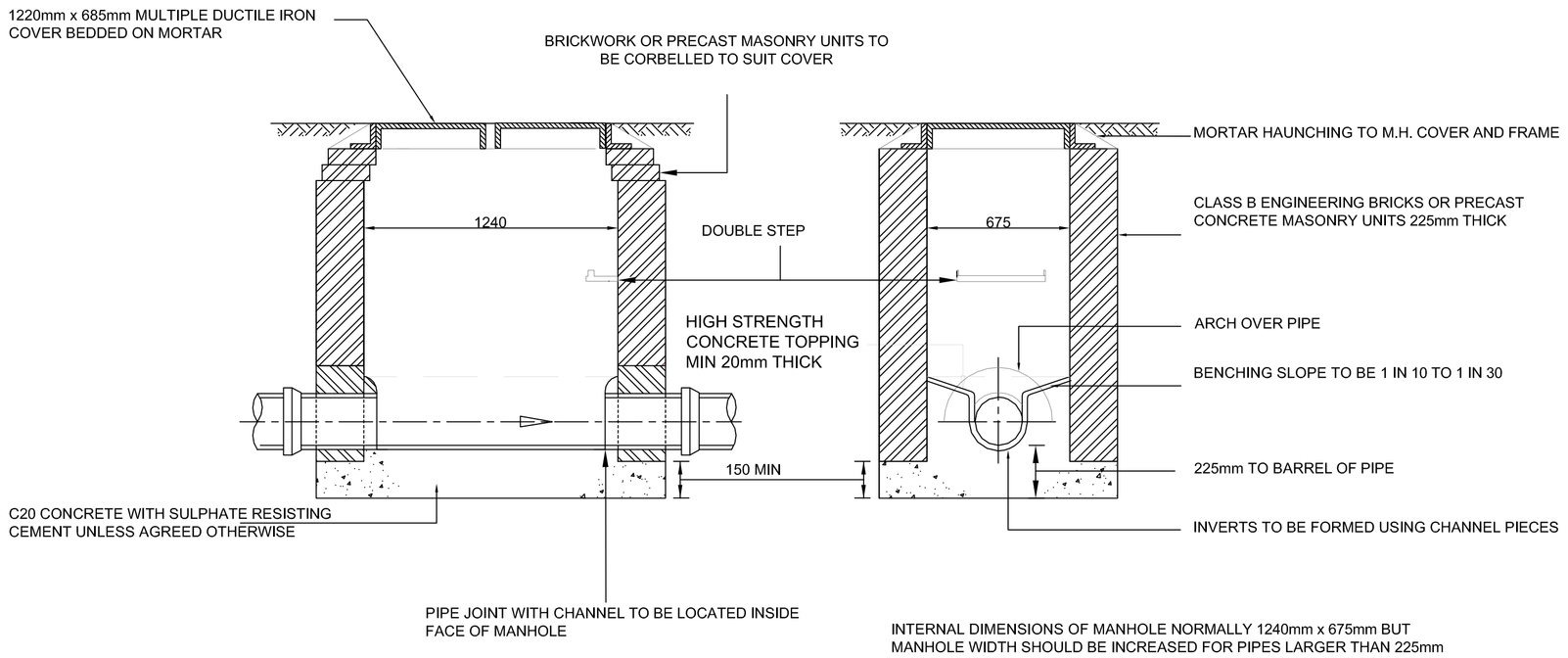


INTERNAL DIMENSIONS OF MANHOLE NORMALLY 1240mm x 675mm BUT MANHOLE WIDTH SHOULD BE INCREASED FOR PIPES LARGER THAN 225mm DIA TO GIVE 225mm BENCHING EACH SIDE AND THE BRICKWORK/MASONRY UNITS CORBELLED DOWN TO SUIT COVER

THE DESIGN OF MANHOLES WILL NEED TO COMPLY WITH THE UNDERTAKER'S SAFETY POLICY

## TYPICAL MANHOLE DETAIL-TYPE C
## DEPTH FROM GROUND LEVEL TO SOFFIT OF PIPE 1.0m TO 1.45m
SCALE 1:20

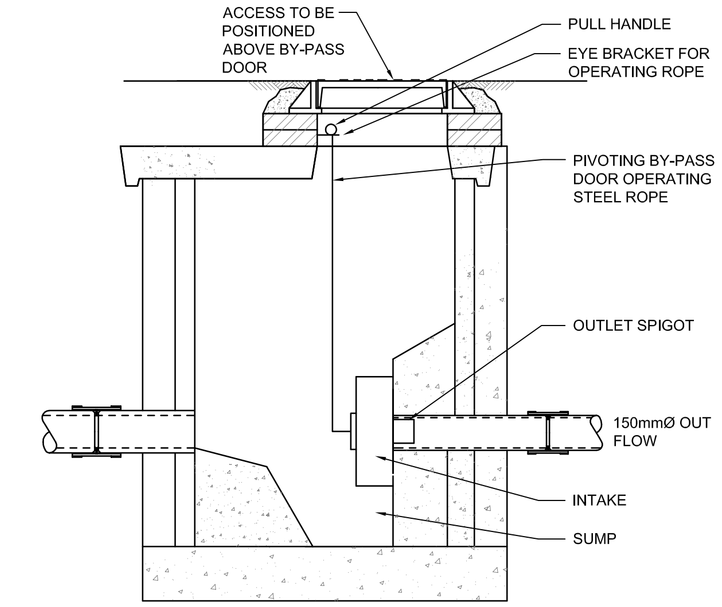


## TYPICAL FLOW CONTROL DETAIL
SCALE 1:20

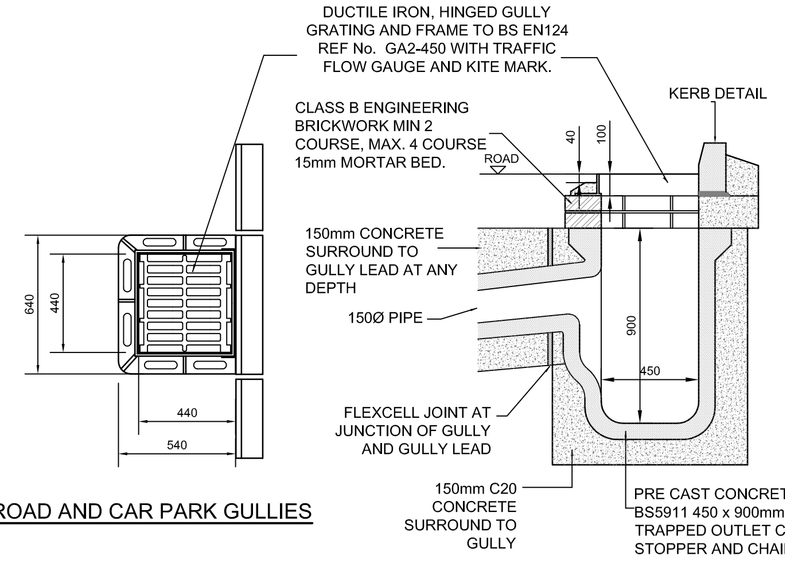


## ACCESS ROAD AND CAR PARK GULLIES
SCALE 1:20

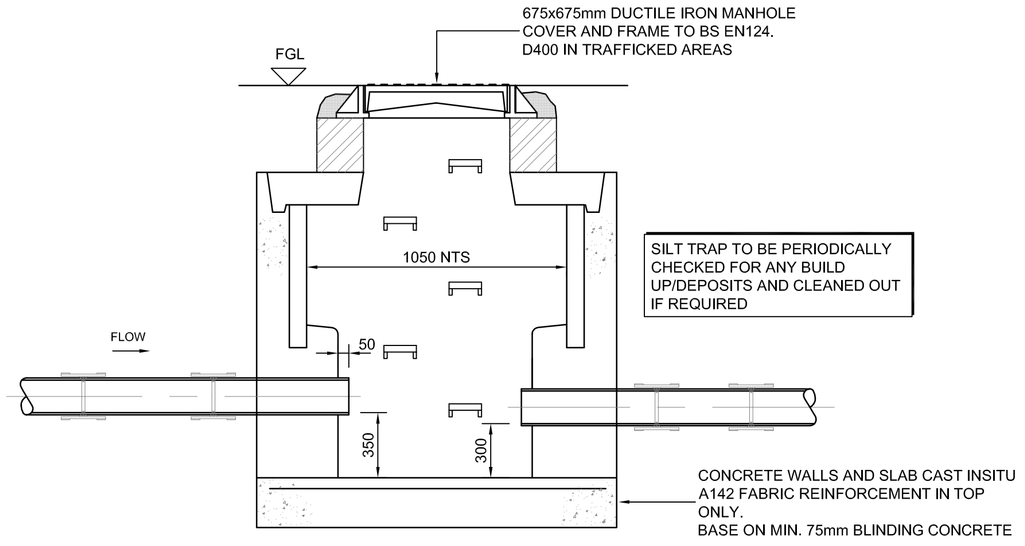


## PRE CAST CONCRETE CATCHPIT DETAIL
SCALE 1:20

# 1015049 A1

Based on.

| | |
|---|---|
| Architects Drg No. | Rev |
| Structural Drg No. | Rev |
| Survey Drg No. | Rev |
| Other Drg No. | Rev |
| Other Drg No. | Rev |

DO NOT SCALE FROM THIS DRAWING

### Notes

1. DRAWING TO BE READ IN CONJUNCTION WITH PROPOSED DRAINAGE LAYOUT DRAWING CLXX(52)4001.

| Issue | Date | Description | By | Chkd | Verfd |
|---|---|---|---|---|---|
| A | 16/03/18 | ISSUED FOR TENDER | CA | AF | LF |

Project
EAST BOLDON

Client
GENTOO HOMES

Architect
GENTOO HOMES

Title
DRAINAGE DETAILS SHEET 2

| Drawing No. | Drawing Status |
|---|---|
| CLXX(52)5002 | TENDER |
| Job No. 1015049 | Scale AS SHOWN |

| Originator | Checked | Verified | Issue. |
|---|---|---|---|
| CA | AF | LF | A |

CUNDALL
4th Floor, Partnership House
Regent Farm Road,
Gosforth,
Newcastle NE3 3AF
Telephone: +44 (0)191 213 1515
Website: www.cundall.com

© Copyright Cundall 2010